STANDARDS COMMITTEE FOR HI-LOK® PRODUCTS

2600 SKYPARK DRIVE, TORRANCE, CALIFORNIA 90509 U.S.A.

HI-SHEAR CORPORATION, U.S.A. ——(Patent Holder)—— CAGE No. 73197 a GFI AEROSPACE Company AIR INDUSTRIES CO., INC., U.S.A. ——(Licensee - U.S.A & Canada)—CAGE No. 06725 HUCK INTERNATIONAL, INC., U.S.A. —— (Licensee)—— CAGE No. 97928 SPS TECHNOLOGIES, U.S.A. ——(Licensee)—— CAGE No. 56878 FAIRCHILD Aerospace Fastener Division—(Licensee)—— CAGE No. 92215 WEST COAST AEROSPACE INC., U.S.A.-(Licensee)—— CAGE No. 60516 (Pins & Steel Collars)	BLANC AERO INDUSTRIES UK LIMITED ——(Licensee)—— CAGE No. OLB68 a GFI AEROSPACE Company HUCK S.A. France ——(Licensee - ECC Countries) BLANC AERO S.A. France ——(Licensee - ECC Countries) a GFI AEROSPACE Company TOKYO SCREW COMPANY, Japan ——(Licensee - Japan)

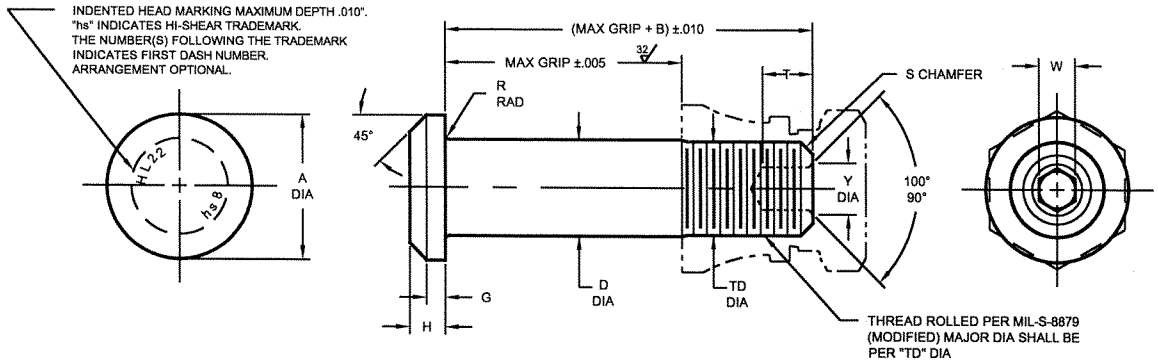

HI-LOK® PIN

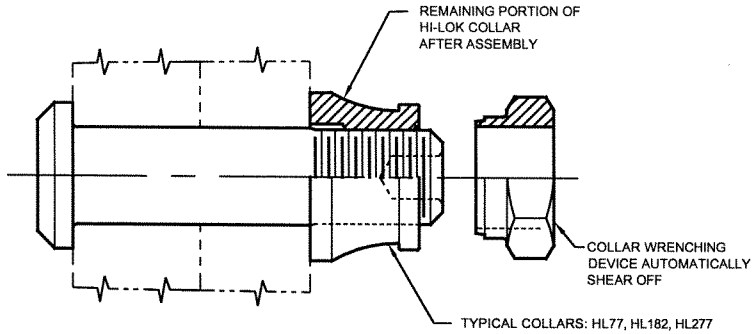

HI-LOK PIN® AND COLLAR AFTER ASSEMBLY

FIRST DASH NO.	PIN NOM DIA	A DIA	B REF	D DIA	TD DIA	G REF	H	R RAD	S CHAMFER REF	THREAD	SOCKET W HEX	SOCKET T DEPTH	SOCKET Y DIA	DOUBLE SHEAR POUNDS MINIMUM	TENSION POUNDS MINIMUM
5	5/32	.262 .242	.312	.1635 .1625	.1595 .1570	.030	.060 .045	.025 .015	1/32" x 45°	8-32UNJC-3A Modified	.0645 .0635	.135 .115	.090 .075	1,760	940
6	3/16	.315 .295	.325	.1895 .1885	.1840 .1810	.035	.074 .055	.025 .015	1/32" x 45°	10-32UNJF-3A Modified	.0806 .0791	.135 .115	.119 .104	2,550	1,240
8	1/4	.412 .387	.395	.2495 .2485	.2440 .2410	.045	.090 .080	.025 .015	1/32" x 45°	1/4-28UNJF-3A Modified	.0967 .0947	.150 .130	.142 .122	4,420	2,170
10	5/16	.505 .475	.500	.3120 .3110	.3060 .3020	.055	.110 .100	.030 .020	3/64" x 45°	5/16-24UNJF-3A Modified	.1295 .1270	.170 .150	.180 .160	6,900	3,020
12	3/8	.600 .565	.545	.3745 .3735	.3680 .3640	.065	.135 .125	.030 .020	3/64" x 45°	3/8-24UNJF-3A Modified	.1617 .1582	.200 .180	.217 .197	9,940	4,370
14	7/16	.676 .641	.635	.4370 .4360	.4310 .4260	.075	.155 .145	.030 .020	3/64" x 45°	7/16-20UNJF-3A Modified	.1930 .1895	.230 .210	.253 .233	13,800	6,000
16	1/2	.770 .735	.685	.4995 .4985	.4930 .4880	.085	.180 .170	.030 .020	3/64" x 45°	1/2-20UNJF-3A Modified	.2242 .2207	.260 .240	.289 .269	18,000	7,600

SEE COLLAR STANDARDS FOR COLLAR STRENGTHS. LOWER STRENGTH (PIN OR COLLAR) DETERMINES SYSTEM STRENGTH.

GENERAL NOTES:
1. Concentricity: "A" to "D" diameter within .010 FIM.
2. Dimensions to be met after finish.
3. Surface texture per ANSI B46.1.
4. Hole preparation per NAS618.
5. Use HL122 for oversize replacement.

MATERIAL: 7075 aluminum alloy per AMS-QQ-A-225/9 or QQ-A-430.

HEAT TREAT: Age to T6 condition per AMS2772.

(20) **FINISH:**
- HL22-( )-( ) = Anodize per AMS-A-8625, dye color natural and cetyl alcohol lube per Hi-Shear Spec. 305.
- HL22D( )-( ) = Anodize per AMS-A-8625, and solid film lube per AS5272, Type I.
- HL22TT( )-( ) = Anodize per AMS-A-8625, dye color natural and translube.

SPECIFICATION: Hi-Lok Product Specification 342.

CODE: First dash number indicates nominal diameter in 1/32nds. Second dash number indicates maximum grip in 1/16ths. See Finish note for explanation of code letters.

HOW TO ORDER EXAMPLE:

Pin Part Number Only
HL22D8-8
- 8/16 or 1/2 Maximum Grip Length
- 8/32 or 1/4 Nominal Diameter Pin
- Solid Film Lubricant
- Pin Part Number

Pin and Collar Assembly Part Number Combination
HL22D778-8
- Size and Grip Length, See Above Example
- Collar Part Number
- Pin Finish
- Pin Part Number

"Hi-Lok" and "HL" are internationally registered trademark of Hi-Shear Corporation.

DRAWN	DATE	TITLE
R.K.L.	5-8-62	**HI-LOK® PIN**
APPROVED	DATE	PROTRUDING SHEAR HEAD ALUMINUM ALLOY 1/16" GRIP VARIATION
CESSNA	5-8-62	
REVISION	DATE	DRAWING NUMBER
(20)	JFO 5-2-01	**HL22**

HL22

JFO-STD/HLPIN

© 2001 Hi-Shear Corporation