STANDARDS COMMITTEE FOR HI-LOK® HI-TIGUE® PRODUCTS

2800 SKYPARK DRIVE, TORRANCE, CALIFORNIA 90509

HI SHEAR CORPORATION, U.S.A. Division of Hi Shear Industries Inc., U.S.A.	(Patent Holder)	U.S. Federal Code I.D. No. 73197	HI SHEAR FASTENERS EUROPE, LTD., U.K. (Licensee)
AIR INDUSTRIES CO., INC.	(Licensee)	U.S. Federal Code I.D. No. 06725	KAMAX-WERKE, Germany (Licensee-EEC Countries)
DEUTSCH FASTENER CO., INC.	(Licensee)	U.S. Federal Code I.D. No. 57928	Rudolph Kellermen GmbH & Co.
SPS TECHNOLOGIES, U.S.A.	(Licensee)	U.S. Federal Code I.D. No. 56878	ST. CHAMOND GRANAT, S.A. France (Licensee-EEC Countries)
VOI SHAN, Division of VSI Corp., U.S.A.	(Licensee)	U.S. Federal Code I.D. No. 92215	SIMMONDS, S.A. France (Licensee-EEC Countries-Collars)
WEST COAST AEROSPACE INC., U.S.A.	(Licensee - Pins & Steel Collars)	U.S. Federal Code I.D. No. 60516	TOKYO SCREW COMPANY, Japan (Licensee-Japan)

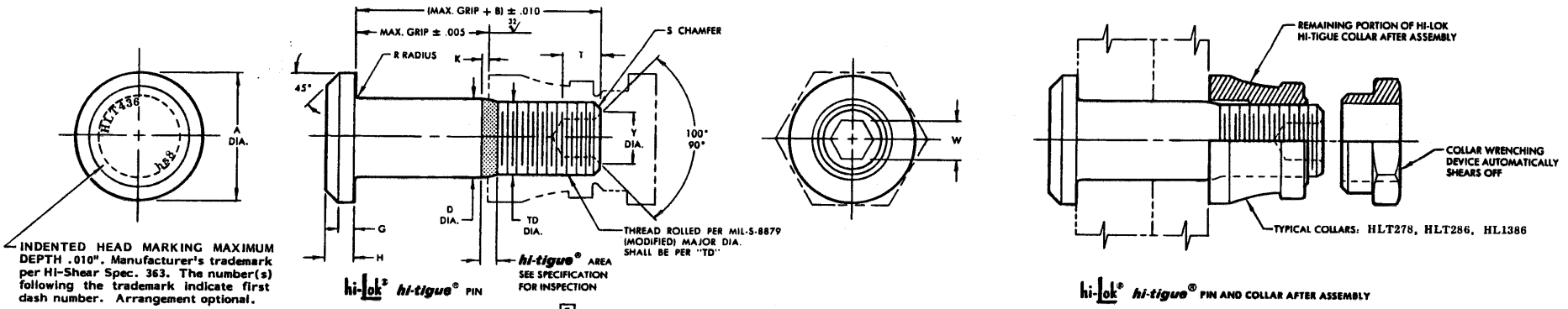

hi-lok® hi-tigue® PIN

hi-lok® hi-tigue® PIN AND COLLAR AFTER ASSEMBLY

[5]

FIRST DASH NO.	NOM. DIA.	A DIA.	B REF.		D DIA. CETYL ALCOHOL	D DIA. COATING OR SOLID FILM LUBE	TD DIA.	G REF.	H	K REF.	R RAD.	S CHAMFER REF.	THREAD	SOCKET W HEX.	SOCKET T DEPTH	SOCKET Y DIA.	DOUBLE SHEAR POUNDS MINIMUM	TENSION POUNDS MINIMUM
-5		NOTE: USE HLT336-6 OR HLT452-6																
-6	13/64	.377 .357	.360		.2026 .2021	.2026 .2016	.1840 .1810	.035	.074 .064	.020	.025 .015	1/32" x 37°	10-32UNJF-3A Modified	.0806 .0791	.100 .080	.119 .104	6,130	2,750
-8	17/64	.440 .415	.435		.2651 .2646	.2651 .2641	.2440 .2410	.045	.090 .080	.025	.025 .015	1/32" x 37°	1/4-28UNJF-3A Modified	.0967 .0947	.110 .090	.142 .122	10,490	5,820
-10	21/64	.505 .475	.545		.3276 .3271	.3276 .3266	.3060 .3020	.055	.112 .102	.031	.030 .020	3/64" x 37°	5/16-24UNJF-3A Modified	.1295 .1270	.130 .110	.180 .160	16,000	9,200
-12	25/64	.600 .530	.590		.3901 .3896	.3901 .3891	.3680 .3640	.075	.140 .130	.037	.030 .020	3/64" x 37°	3/8-24UNJF-3A Modified	.1617 .1582	.160 .140	.217 .197	22,700	14,000
-14	29/64	.676 .592	.690		.4526 .4521	.4526 .4516	.4310 .4260	.095	.160 .150	.039	.030 .020	3/64" x 37°	7/16-20UNJF-3A Modified	.1930 .1895	.190 .170	.253 .233	30,600	18,900
-16	33/64	.770 .717	.740		.5151 .5146	.5151 .5141	.4930 .4880	.095	.188 .178	.045	.030 .020	3/64" x 37°	1/2-20UNJF-3A Modified	.2242 .2207	.220 .200	.289 .269	39,600	25,500
-18	37/64	.877 .842	.825		.5771 .5766	.5776 .5761	.5550 .5500	.125	.210 .200	.043	.040 .025	1/16" x 37°	9/16-18UNJF-3A Modified	.2555 .2520	.260 .240	.326 .306	49,700	32,400

SEE COLLAR STANDARDS FOR COLLAR STRENGTHS. LOWER STRENGTH (PIN OR COLLAR) DETERMINES SYSTEM STRENGTH.

GENERAL NOTES:
1. Concentricity: "A" to "D" diameter within .010 FIR.
2. Surface texture per ANSI B46.1.
3. Hole preparation per NAS618.
4. Use HLT636 for oversize replacement.
5. Maximum "D" diameter may be increased by .0002 to allow for coating application.

MATERIAL: 6Al-4V titanium alloy per Spec. AMS4928 or AMS4967.

HEAT TREAT: 160,000 psi tensile minimum (95,000 psi shear minimum).

Ⓢ FINISH:
- HLT436-( )-( ) = Cetyl alcohol lube per Hi-Shear Spec. 305.
- HLT436AP-( )-( ) = Hi-Kote 1 aluminum coating per Hi-Shear Spec. 294 and cetyl alcohol lube per Hi-Shear Spec. 305.
- HLT436BJ-( )-( ) = I.V.D. aluminum coating per MIL-C-83488, Type II, Class 3, and cetyl alcohol lube per Hi-Shear Spec. 305.
- HLT436FE-( )-( ) = Grit blast top of head, cetyl alcohol lube per Hi-Shear Spec. 305 and red identification on thread end.
- HLT436TA-( )-( ) = Ti-Shield IIIA or Tiodize Type II, Hi-Kote solid film lube per Hi-Shear Spec. 292, and cetyl alcohol lube per Hi-Shear Spec. 305.
- HLT436TB-( )-( ) = Hi-Kote 2 solid film lube per Hi-Shear Spec. 292 and cetyl alcohol lube per Hi-Shear Spec. 305.

SPECIFICATION: Hi-Lok Hi-Tigue Product Specification 342.

CODE: First dash number indicates nominal diameter in 1/32nds of the pin which HLT436 oversize pin replaces. Second dash number indicates maximum grip in 1/16ths. See "Finish" note for explanation of code letters.

HOW TO ORDER EXAMPLES:

Pin Part Number Only

HLT436-8-8
- 8/16 or 1/2 Maximum Grip Length
- Replaces 8/32 or 1/4 Nominal Diameter Pin
- Pin Part Number

Pin and Collar Assembly Part Number Combination

HLT436286-8-8
- Size and Grip Length, See Above Example
- Collar Part Number
- Pin Part Number

U.S. Patent 3,578,367 and international patents. "HL", "Hi-Lok", "HLT", and "Hi-Tigue" are internationally registered trademarks of Hi-Shear Corporation.

DRAWN	DATE	hi-lok® hi-tigue® PIN
Van	3-17-69	PROTRUDING TENSION HEAD TITANIUM
APPROVED	DATE	1/16" GRIP VARIATION – 1/64" OVERSIZE
Von Gilbert	3-17-69	
REVISION 12	DATE D.P.S. 9-26-88	DRAWING NUMBER HLT436

HLT436

2-1597

© 1988 Hi-Shear Corporation